CY8CKIT-148 PSoC 4700S Inductive Sensing Evaluation Kit

CONTENTS

PAGE	DESCRIPTION
01	Title, Table of Contents & Drawing Numbers
02	Block Diagram
03	KitProg2 Schematics
04	PSoC 4700S
05	Inductive Sensing Interface
06	Accesories
07	Revision History

Drawing Numbers	
PCBA	121-60503-01
PCB	600-60503-01
FAB DRW	610-60503-01
ASSY DRW	620-60503-01
SCH DRW	630-60503-01

CYPRESS SEMICONDUCTOR
198 CHAMPION COURT
SAN JOSE, CA 95134
(408) 943-2600

CYPRESS SEMICONDUCTOR © 2018

SCH Title : CY8CKIT-148 PSoC 4700S Inductive Sensing Evaluation Kit

Page Title : Title Page

Size	Document Number	Drawn By	Approved By	Rev
A4	630-60503-01	NMIT	RKAD	05

Date: Wednesday, May 30, 2018 Sheet 1 of 7

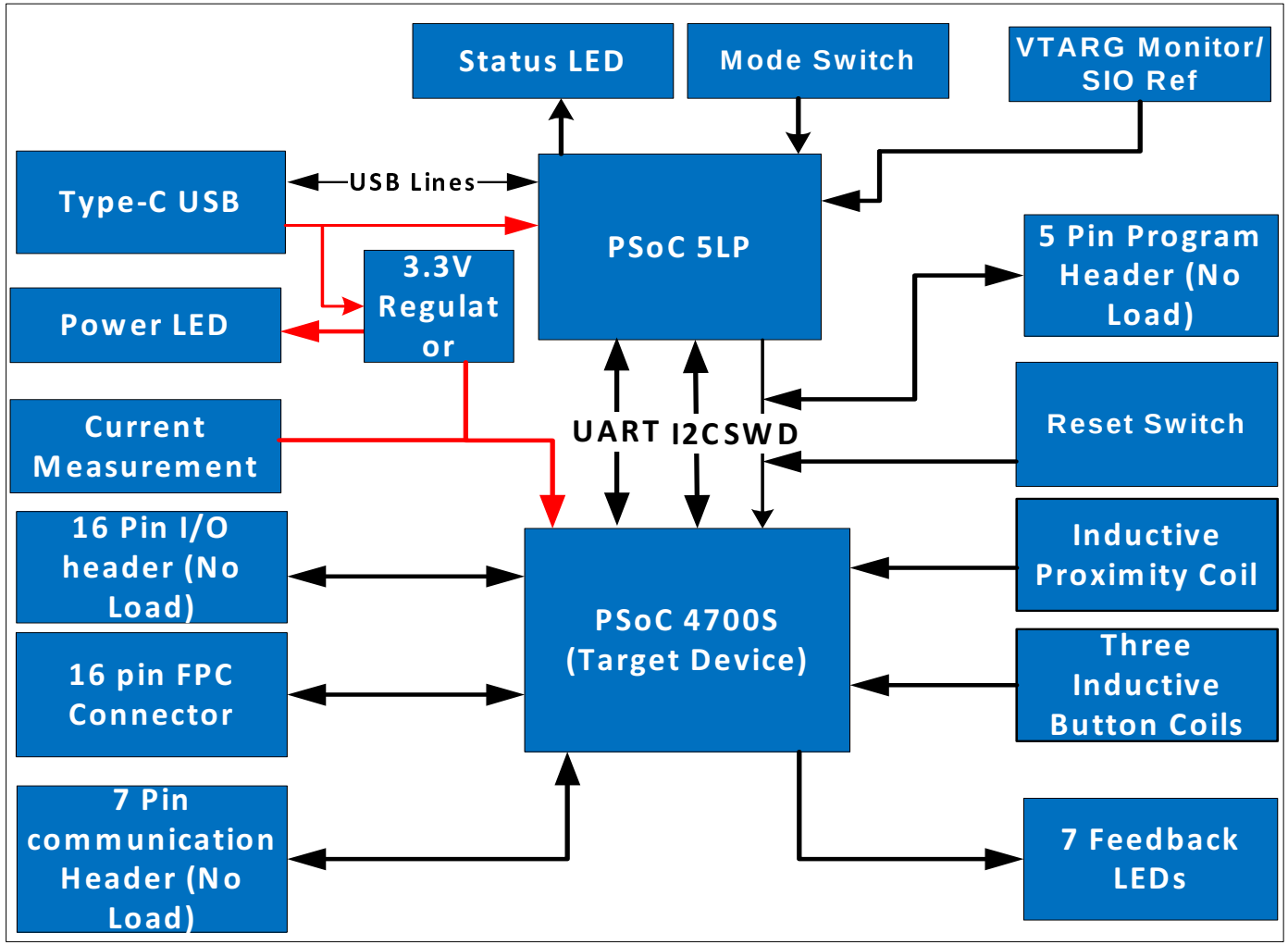

CYPRESS SEMICONDUCTOR
198 CHAMPION COURT
SAN JOSE, CA 95134
(408) 943-2600

CYPRESS SEMICONDUCTOR © 2018

SCH Title : CY8CKIT-148 PSoC 4700S Inductive Sensing Evaluation Kit

Page Title : Block Diagram

Size	Document Number	Drawn By	Approved By	Rev
A4	630-60503-01	NMIT	RKAD	05

Date: Tuesday, June 05, 2018 Sheet 2 of 7

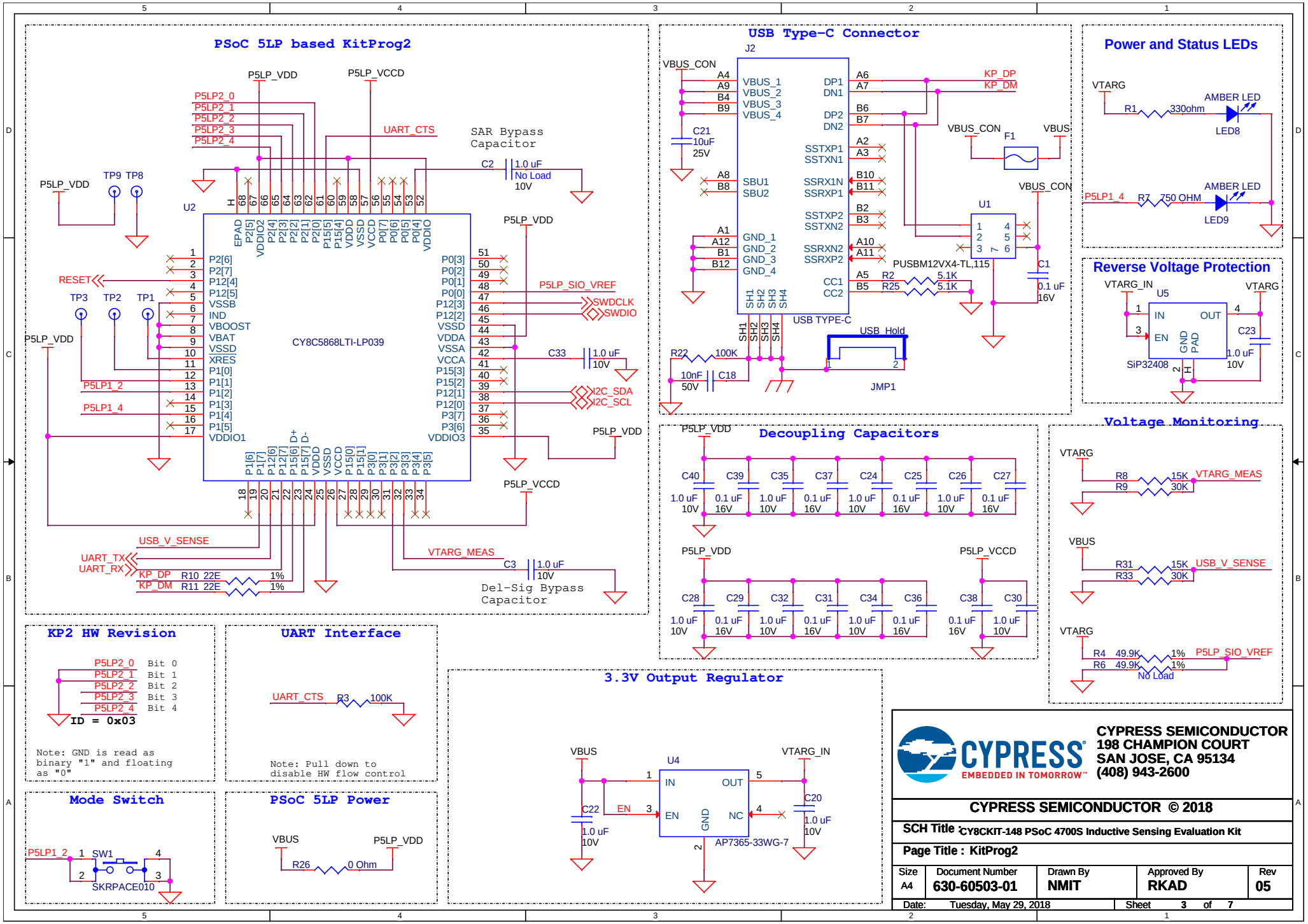
PSoC 5LP based KitProg2
P5LP_VDD
P5LP_VCCD
P5LP2_0
P5LP2_1
P5LP2_2
P5LP2_3
P5LP2_4
UART_CTS
SAR Bypass Capacitor
C2 1.0 uF No Load 10V
TP9 TP8
U2
CY8C5868LTI-LP039
RESET
TP3 TP2 TP1
P5LP1_2
P5LP1_4
P5LP_SIO_VREF
SWDCLK
SWDIO
C33 1.0 uF 10V
I2C_SDA
I2C_SCL
USB_V_SENSE
UART_TX
UART_RX
KP_DP
KP_DM
R10 22E 1%
R11 22E 1%
VTARG_MEAS
C3 1.0 uF 10V
Del-Sig Bypass Capacitor
USB Type-C Connector
J2
VBUS_CON
C21 10uF 25V
KP_DP
KP_DM
F1
VBUS
U1
PUSBM12VX4-TL,115
C1 0.1 uF 16V
R2 5.1K
R25 5.1K
USB TYPE-C
USB_Hold
R22 100K
10nF C18 50V
JMP1
Power and Status LEDs
VTARG
R1 330ohm
AMBER LED
LED8
P5LP1_4
R7 750 OHM
LED9
Reverse Voltage Protection
VTARG_IN
U5
SiP32408
C23 1.0 uF 10V
Decoupling Capacitors
C40 C39 C35 C37 C24 C25 C26 C27
C28 C29 C32 C31 C34 C36 C38 C30
Voltage Monitoring
R8 15K
R9 30K
VTARG_MEAS
R31 15K
R33 30K
USB_V_SENSE
R4 49.9K 1%
R6 49.9K 1%
No Load
KP2 HW Revision
Bit 0
Bit 1
Bit 2
Bit 3
Bit 4
ID = 0x03
Note: GND is read as binary "1" and floating as "0"
UART Interface
R3 100K
Note: Pull down to disable HW flow control
Mode Switch
SW1
SKRPACE010
PSoC 5LP Power
R26 0 Ohm
3.3V Output Regulator
U4
AP7365-33WG-7
C22 1.0 uF 10V
C20 1.0 uF 10V
CYPRESS SEMICONDUCTOR
198 CHAMPION COURT
SAN JOSE, CA 95134
(408) 943-2600
CYPRESS SEMICONDUCTOR © 2018
SCH Title : CY8CKIT-148 PSoC 4700S Inductive Sensing Evaluation Kit
Page Title : KitProg2
Size A4
Document Number 630-60503-01
Drawn By NMIT
Approved By RKAD
Rev 05
Date: Tuesday, May 29, 2018
Sheet 3 of 7

PSoC 4700S Device

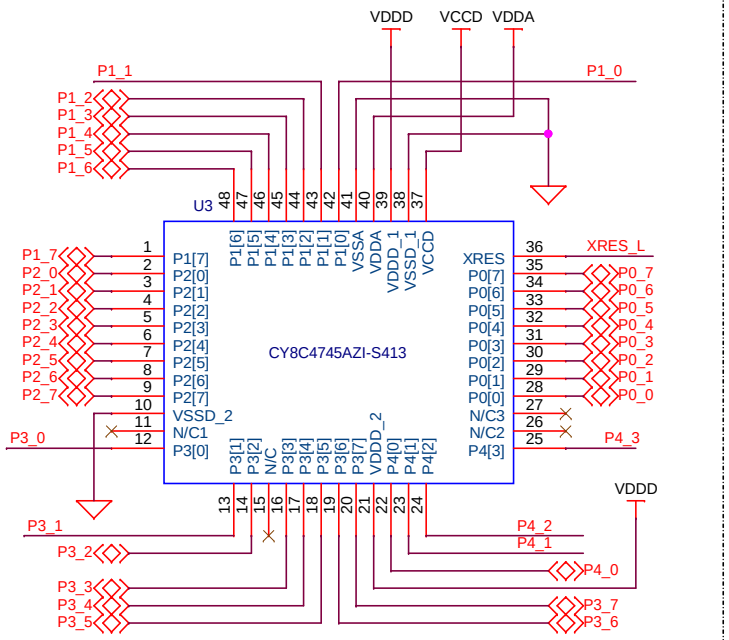

Test Points*

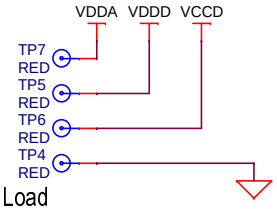

*All Test Points are No Load

Target Program/Debug Connector

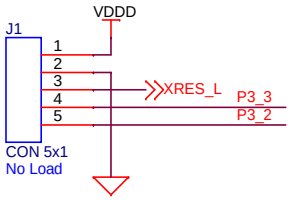

I2C Pull Ups

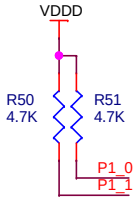

System Capacitors

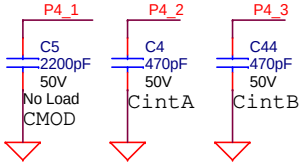

IO Header

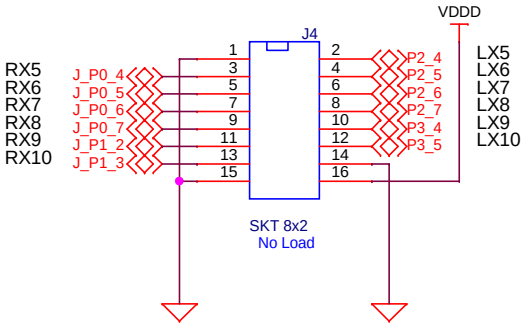

Communication And Programming Lines

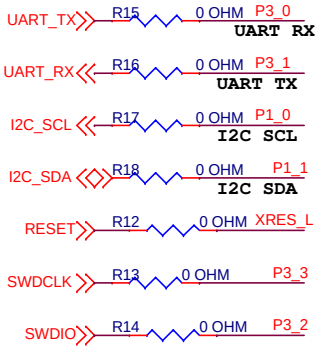

Coupling Capacitors for RX

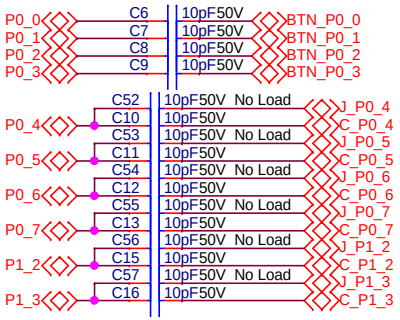

Communication Header

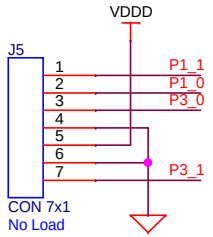

Current Measurement

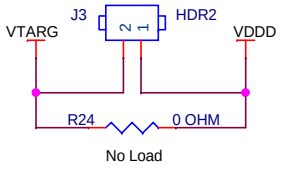

Voltage Distribution

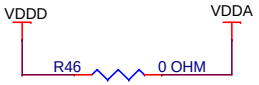

Decoupling Capacitors

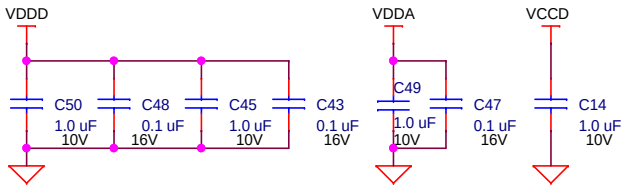

Reset

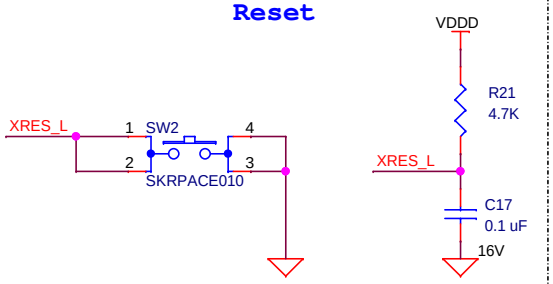

CYPRESS SEMICONDUCTOR
198 CHAMPION COURT
SAN JOSE, CA 95134
(408) 943-2600

CYPRESS SEMICONDUCTOR © 2018

SCH Title	CY8CKIT-148 PSoC 4700S Inductive Sensing Evaluation Kit
Page Title	PSoC 4700S

Size	Document Number	Drawn By	Approved By	Rev
A4	630-60503-01	NMIT	RKAD	05

Date: Monday, June 04, 2018 Sheet 4 of 7

Inductive Button Coil (Sensor 1)

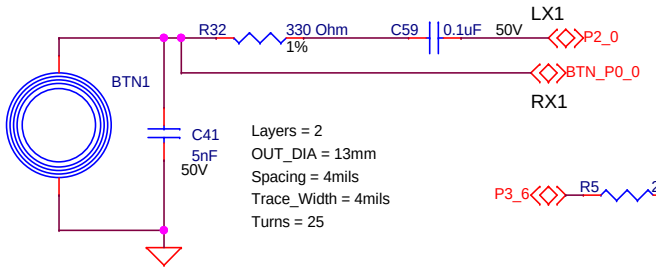

Sensor 1 Feedback LED

Inductive Button Coil (Sensor 2)

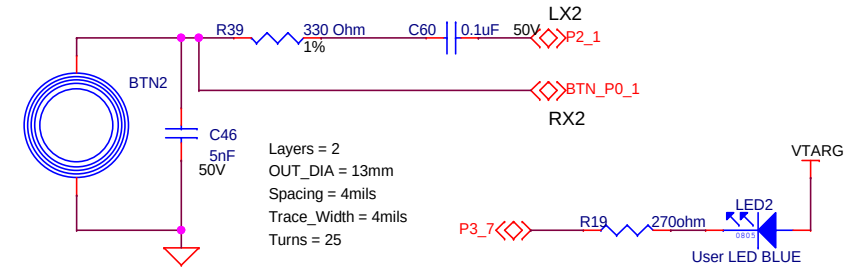

Sensor 2 Feedback LED

Inductive Button Coil (Sensor 3)

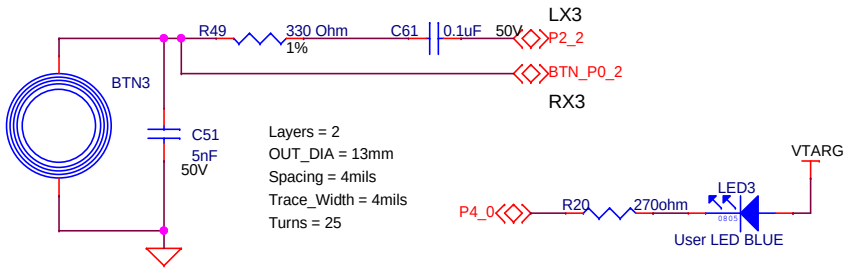

Sensor 3 Feedback LED

PROXIMITY SENSOR COIL

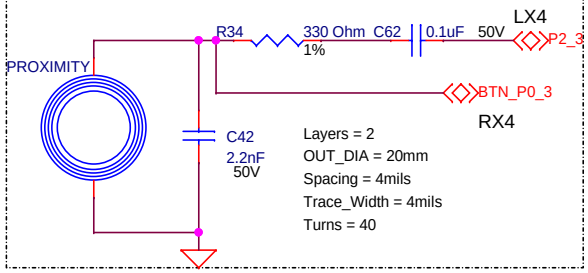

Proximity Feedback LEDs

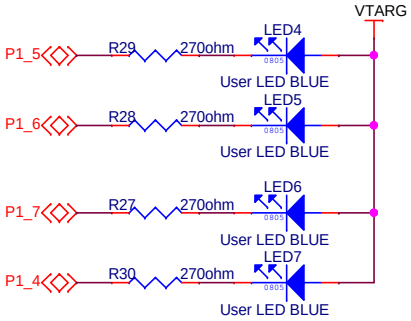

FPC Connector

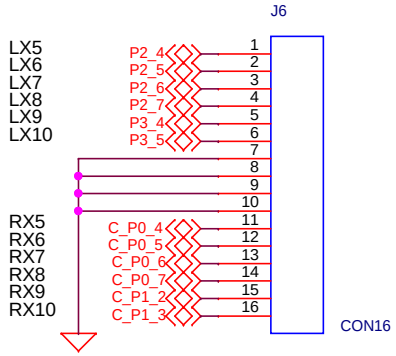

Recommended FPC cable for this connector : 0152660165

CYPRESS SEMICONDUCTOR
198 CHAMPION COURT
SAN JOSE, CA 95134
(408) 943-2600

CYPRESS SEMICONDUCTOR © 2018

SCH Title : CY8CKIT-148 PSoC 4700S Inductive Sensing Evaluation Kit				
Page Title : Inductive Sensing Interface				
Size: A4	Document Number: 630-60503-01	Drawn By: NMIT	Approved By: RKAD	Rev: 05
Date: Thursday, May 31, 2018		Sheet 5 of 7		

Accessories

Cylindrical Bumpons

SJ61A4 SJ61A4

SJ61A4 SJ61A4

Aluminium Overlay

Aluminium Overlay

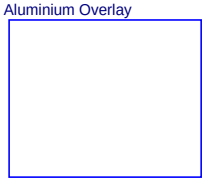

PCBA label

LBL PCA Label LBL QR Code

USB Type C Cable

USB Type C Cable

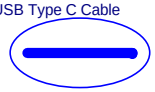

Metal Target

Aluminium Coin

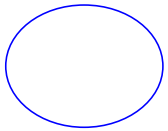

SPC02SYAN

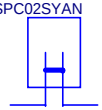

USB_Hold



CYPRESS SEMICONDUCTOR
198 CHAMPION COURT
SAN JOSE, CA 95134
(408) 943-2600

CYPRESS SEMICONDUCTOR © 2018

SCH Title : CY8CKIT-148 PSoC 4700S Inductive Sensing Evaluation Kit				
Page Title : Accesories				
Size A4	Document Number 630-60503-01	Drawn By NMIT	Approved By RKAD	Rev 05
Date: Wednesday, May 30, 2018		Sheet 6 of 7		

REVISION HISTORY

Rev	DESCRIPTION	DATE
01	Prototyping Kit Version	1/2/2018
02	Embedded World Release	1/3/2018
03	Definition Changed. Prototyping Kit version for new definition	1/4/2018
04	Beta Release	5/8/2018
05	Public Release v1	5/28/2018

CYPRESS SEMICONDUCTOR
198 CHAMPION COURT
SAN JOSE, CA 95134
(408) 943-2600

CYPRESS SEMICONDUCTOR © 2018

SCH Title : CY8CKIT-148 PSoC 4700S Inductive Sensing Evaluation Kit

Page Title : Revision History

Size	Document Number	Drawn By	Approved By	Rev
A4	630-60503-01	NMIT	RKAD	05

Date: Monday, May 28, 2018 Sheet 7 of 7